Basic Connection

Coaxial / RF Cable / Antenna

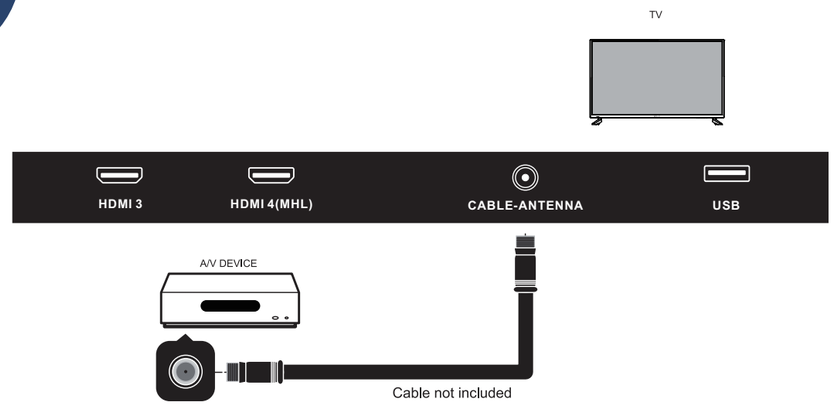

Connect Power Cord

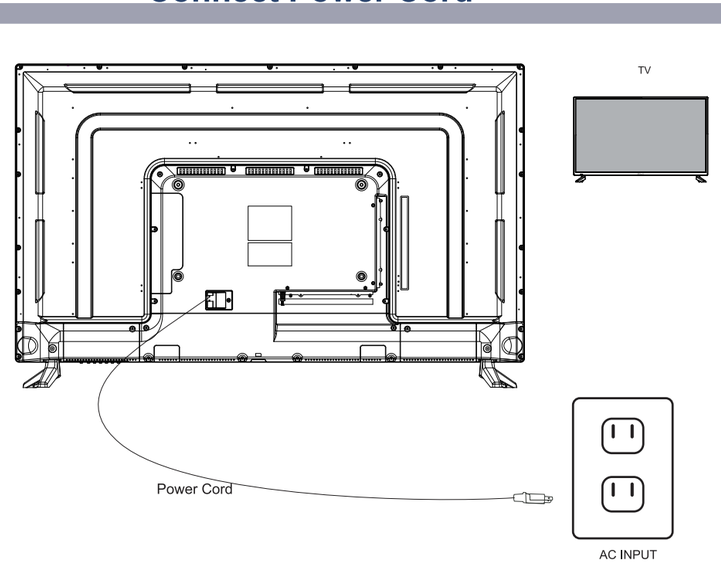

Press the POWER button on the remote control to turn on the TV

QUICK START GUIDE

BOLVA

Simple Steps for Connecting your TV to A/V Devices

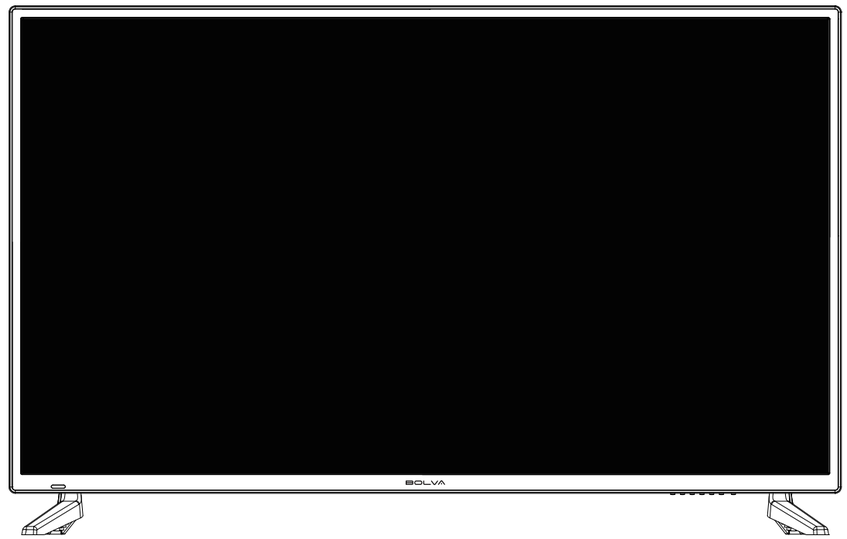

IMPORTANT NOTE:
During setup, do NOT run the “Channel Auto Scan” function if your TV is connected to a Cable or Satellite set top box.

For technical support, visit our website www.bolvadigital.com or call the BLOVE Technical Support Center for technical assistance or troubleshooting at 1-866-594-5445, Monday to Saturday, 10:00AM to 7:00PM EST.

A/V Devices Include:

- Blu-ray® Disc Players
- DVD Players
- Cable, Satellite, or Set-Top Boxes
- VCRs
- Game Consoles

If you need additional help, please consult your user manual.

“HDMI”, the HDMI Logo and High-Definition Multimedia Interface are trademarks or registered trademarks of HDMI Licensing LLC.”
“Blu-ray Disc” is a trademark of Blu-ray Disc Association, registered in the U.S. and other countries. All other trademarks are the property of their respective owners.

Insert the TV into the base and securely attach.
Install the batteries in the Remote Control

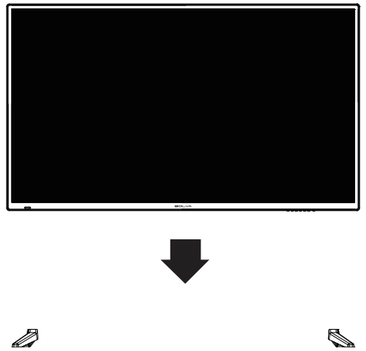

Stand Base & Post may vary but assembly is the same.
Use the 4 enclosed screws to secure the base to the post.

To operate this TV using the remote control provided by your Cable / Satellite provider, follow the programming instructions included with the providers' remote control and input the following codes when prompted;

-For Comcast or DirecTV Remote Controls, input the code- 10030 or 12731
-For AT&T (U-verse) Remote Controls, input the code- 1043
-For RCA Universal Remote Controls, input the code- 0030
-For Dish Network Remote Controls, input the code- 506
-For Cox Remote Controls, input the code- 2397, 2049, 10030, or 12731
-For Optimum Remote Controls, input the code- 0040
-For Spectrum/Time Warner Remote Controls, input the code- 761

Better Connection

Component

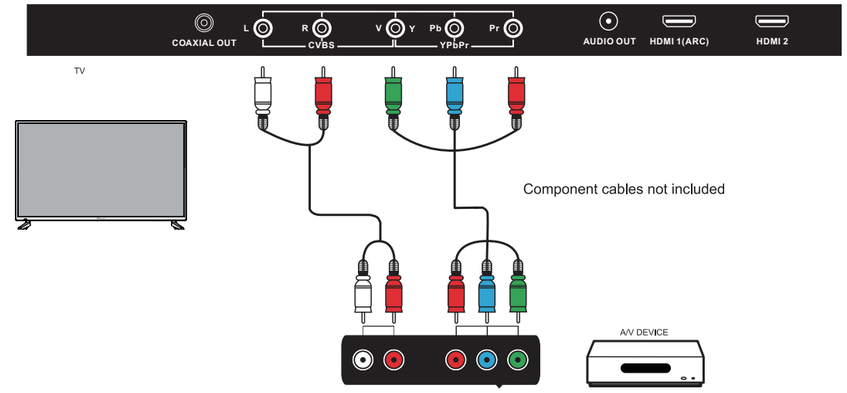

Best Connection

HDMI

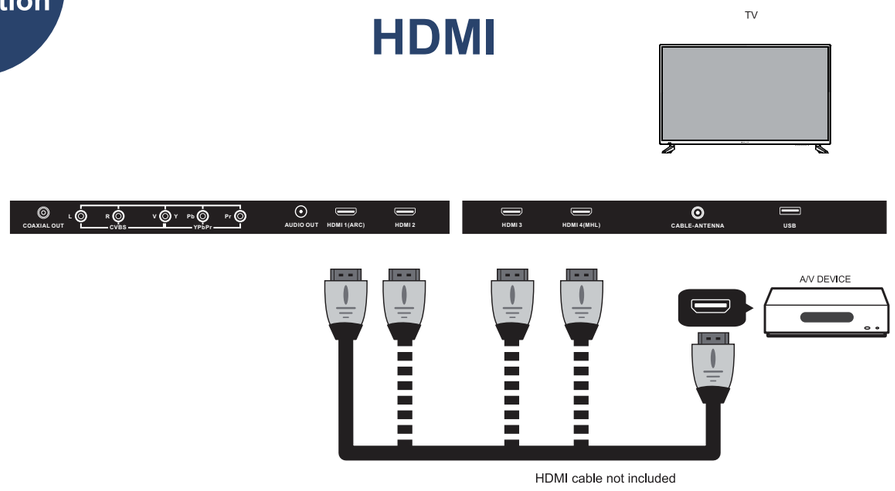

Good Connection
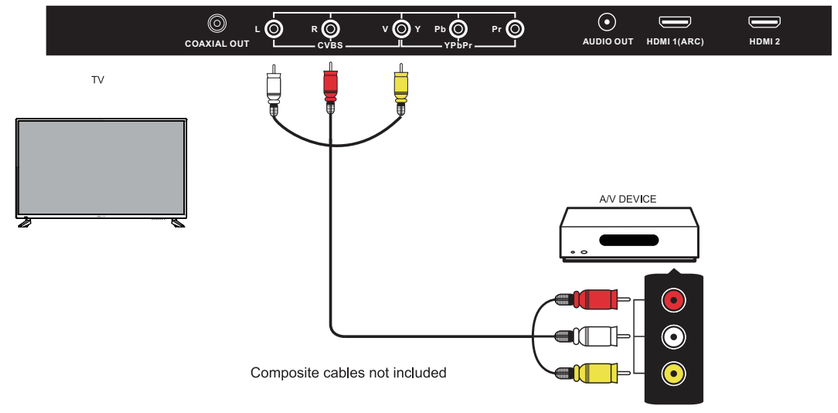
Composite